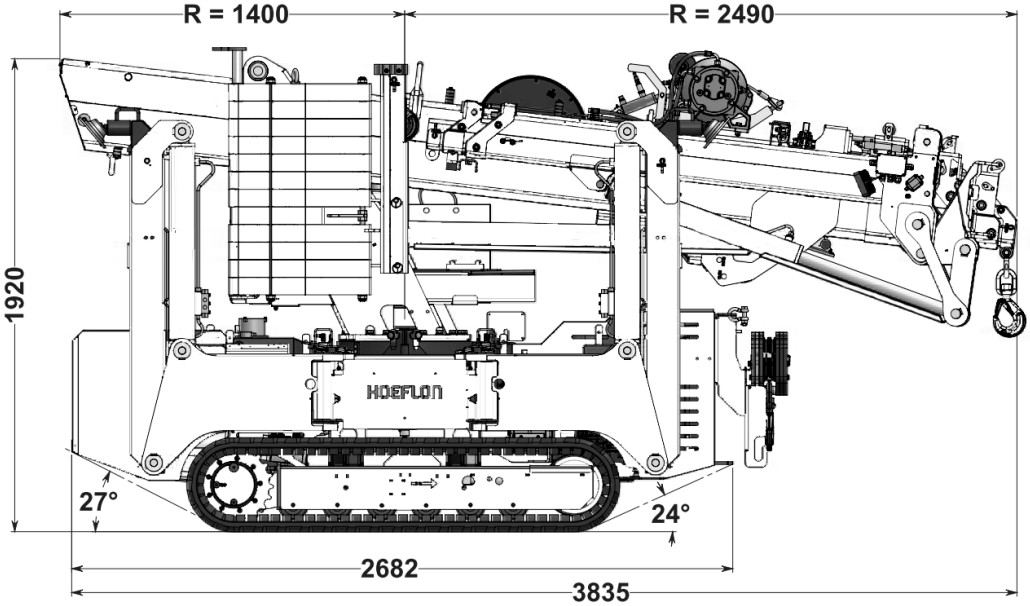
R = 1400
R = 2490
1920
HOEFLON
27°
24°
2682
3835

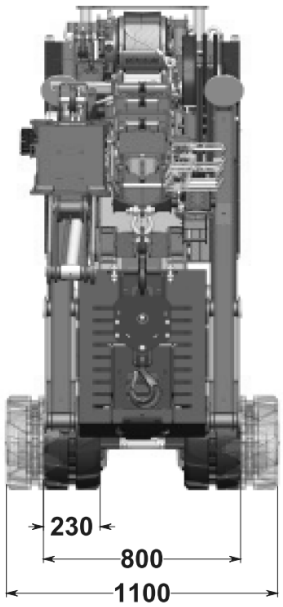
230
800
1100

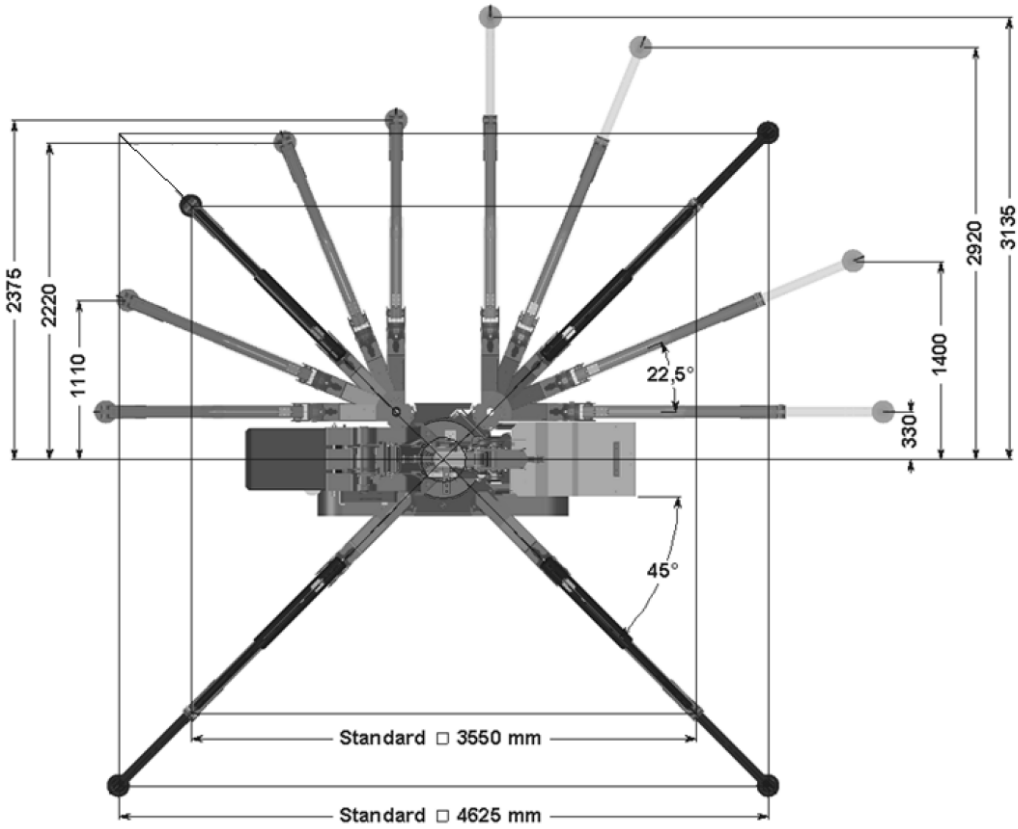
2375
2220
1110
22,5°
1400
2920
3135
330
45°
Standard □ 3550 mm
Standard □ 4625 mm

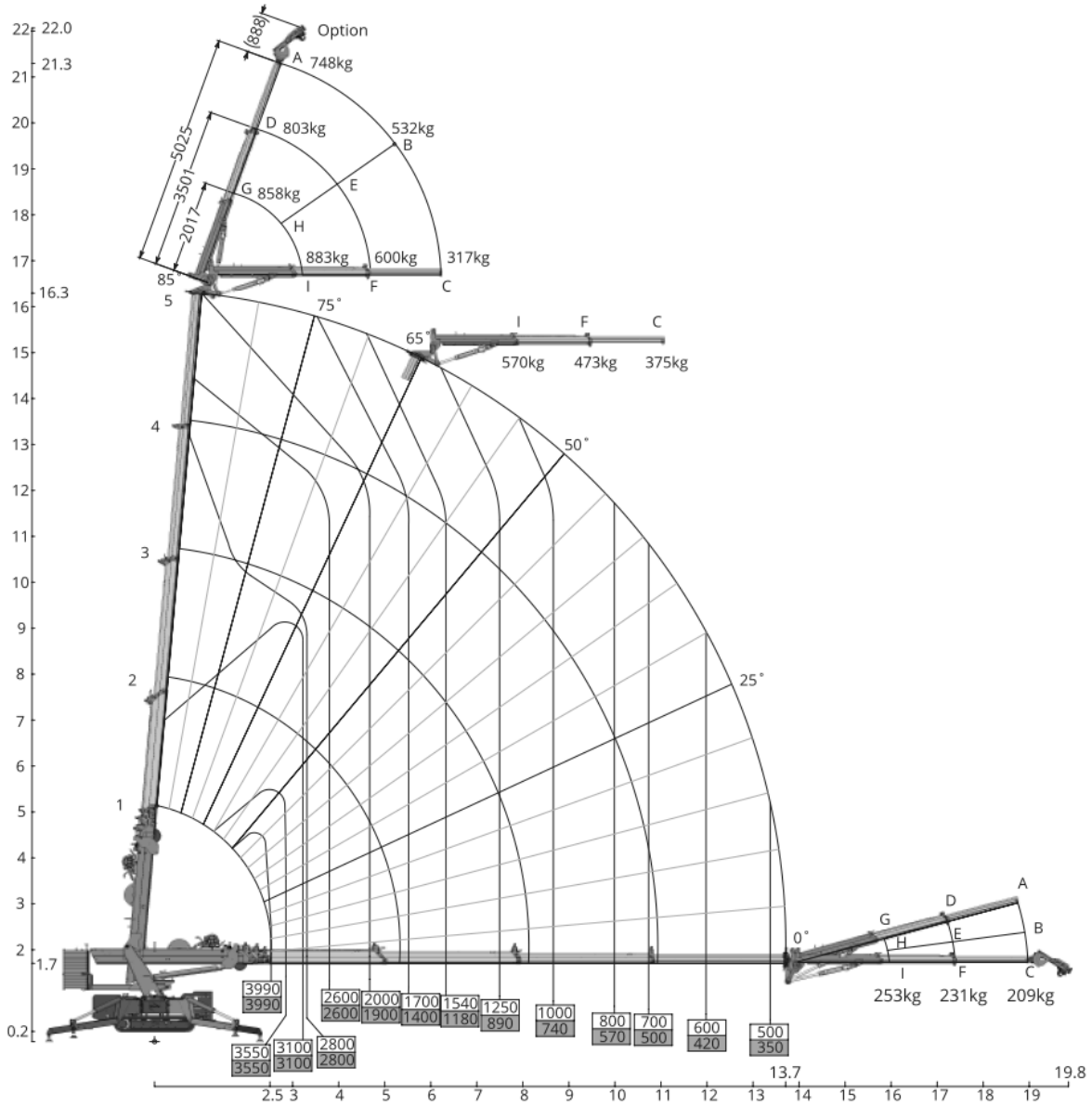
Option
748kg
803kg
532kg
858kg
883kg
600kg
317kg
570kg
473kg
375kg
253kg
231kg
209kg
5025
3501
2017
888
85
75°
65°
50°
25°
0°
22.0
21.3
16.3
1.7
0.2
13.7
19.8
3990 3990
2600 2600
2000 1900
1700 1400
1540 1180
1250 890
1000 740
800 570
700 500
600 420
500 350
3550 3550
3100 3100
2800 2800

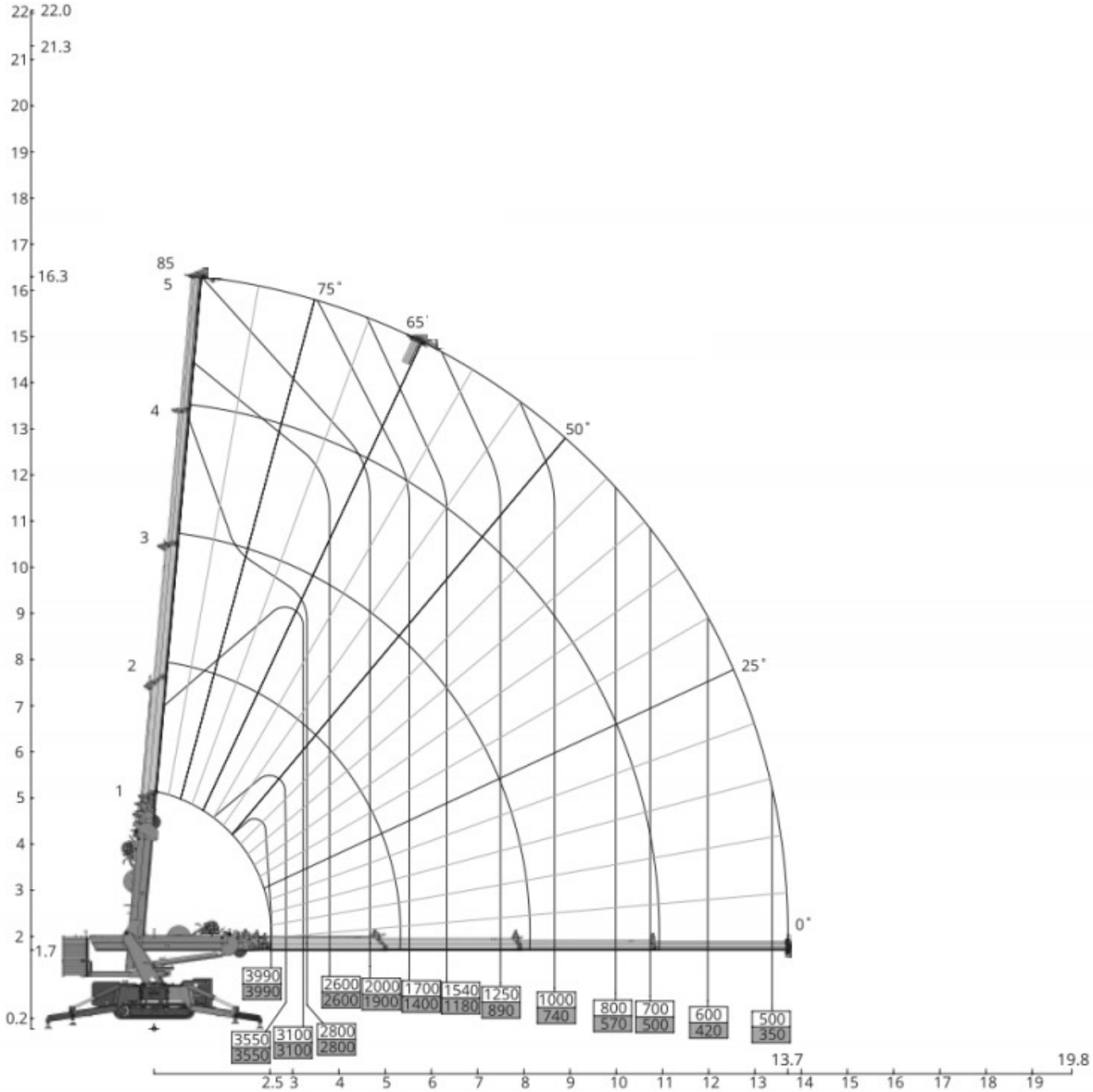
22.0
21.3
16.3
1.7
0.2
85
5
4
3
2
1
75°
65°
50°
25°
0°
3990
3990
2600
2600
2000
1900
1700
1400
1540
1180
1250
890
1000
740
800
570
700
500
600
420
500
350
3550
3550
3100
3100
2800
2800
2.5
13.7
19.8